TEL 905.695.2055 **toll free** 1.800.660.5391
FAX 905.695.2056 **toll free** 1.800.660.5390
33 West Beaver Creek Road Richmond Hill, Ontario Canada L4B 1L8

STAFFORD, 32" RECTANGULAR CHANDELIER

PRODUCT DETAILS

No.	:	37118-013
Product Color	:	CHROME/BLACK
Product Material	:	METAL
Shade / Accent Material	:	OPEN FRAME MIXED METALS
Length	:	31.5"
Width	:	10"
Height	:	20"
Overall Height	:	92.75"
Weight	:	9lbs

LIGHT SOURCE DETAILS

Number of Bulbs	:	5
Light Source	:	Incandescent
Light Source Type	:	EDISON
Input Voltage	:	120V
Bulb Voltage	:	120V
Socket Type	:	E26
Wattage	:	60W
Total Wattage	:	300W
Bulb Included	:	Yes
Dimmable	:	Yes

TECHNICAL DETAILS

Hanging Support Type	:	CHAIN
Hanging Support Length	:	72"
Rods Included	:	48"+48"
Canopy / Backplate Length	:	12.75"
Canopy / Backplate Height	:	0.75"
Canopy / Backplate Width	:	5"

Options Available

ITEM NO.	FINISH	SHADE
37118-013	CHROME/BLACK	

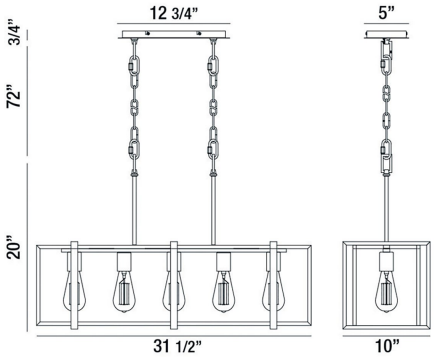

PROJECT INFORMATION

Job Name: Date: Type:

Comments: