INSTALLATION INSTRUCTIONS FOR COMPACT WET LOCATION EXIT SIGN

READ AND FOLLOW
ALL SAFETY
INSTRUCTIONS!

IMPORTANT SAFEGUARDS

WARNING: RISK OF ELECTRIC SHOCK - NEVER CONNECT TO, DISCONNECT FROM, OR SERVICE WHILE EQUIPMENT IS ENERGIZED.

WARNING: FAILURE TO FOLLOW THESE INSTRUCTIONS AND WARNINGS MAY RESULT IN DEATH, SERIOUS INJURY OR SIGNIFICANT PROPERTY DAMAGE - For your protection, read and follow these warnings and instructions carefully before installing or maintaining this equipment. These instructions do not attempt to cover all installation and maintenance situations.

- All service shall be performed by qualified service personnel. This product must be installed and maintained in accordance with the applicable installation codes by a person familiar with the construction operation of the product and the hazards involved.
- This product must be installed in accordance with the applicable installation codes and ordinances.
- Before wiring to power supply, turn off electricity at fuse or circuit breaker.
- Disconnect A.C. power and unplug battery before servicing.
- Consult your local building code for approved wiring and installation.
- May use outdoors (-20°C/-4°F ~ 50°C/122°F)
- Do not let power supply cord touch hot surfaces.
- Do not mount near gas or electric heater.
- Equipment should be mounted in locations and at heights where it will not readily be subjected to tampering by unauthorized personnel.
- The use of accessory equipment not recommended by the manufacturer may cause an unsafe condition.
- Do not use this equipment for other than intended use.
- The AC voltage rating of this equipment is specified on the product label. Do not connect equipment to any other voltage.

SAVE THESE INSTRUCTIONS AND
DELIVER TO OWNER AFTER INSTALLATION.

INSTALLATION INSTRUCTIONS FOR EMERGENCY EXIT SIGN

WALL MOUNT INSTALLATION

1. Use screwdriver to loosen the screws on the lens.
2. Remove lens from sign, set aside.
3. Remove EXIT stencil from housing, set aside.
4. Drill or knock out appropriate knockouts on back plate to fit junction box mounting points.
5. Drill or knock out center hole in back plate for EXIT supply wire leads.
6. Remove backing from self adhesive junction box gasket and adhere to back plate.
7. Route EXIT input wires through center hole of the back plate and make wiring connection. For 120V, use black and white wires and for 277V, use red and white wires.
8. Secure back plate to junction box (hardware not included).
9. Remove proper chevron(s) as required. When removing chevrons it may be helpful to remove the color diffuser panel to allow easier access to the chevrons. If removing color diffuser panel it is important to remember to reinstall the diffuser panel once chevron(s) have been removed.
10. Connect battery to lamp board (battery back up models only).
11. Secure face plate(s) to the housing.
12. Secure lens to face plate and securely torque screws.
13. Apply continuous AC power and press “TEST” button to check operation.

CEILING OR END MOUNT INSTALLATION

1. Use screwdriver to loosen the screws on the lens.
2. Remove lens from sign, set aside.
3. Remove EXIT stencil from housing, set aside.
4. Drill a ¾” hole through the desired mounting knock out located on the frame of the sign. For ceiling mount, knock out will be located on the top of the housing. For wall mount, knock out will be located on the side of the housing.
5. Using provided hardware, thread nut onto pipe nipple. Slide pipe nipple through canopy center hole.
6. Remove backing from self adhesive junction box gasket and adhere to back of mounting canopy. Remove backing from self adhesive pipe thread gasket and adhere to front of mounting canopy.
7. Place screws (provided) in holes on the canopy.
8. Route EXIT input wires through knockout in EXIT frame, pipe nut and metal mounting plate.
9. Make wiring connection. For 120V, use black and white wires and for 277V, use red and white wires. WARNING: Properly insulate the unused lead with a wire nut (provided) or other approved means.
10. Push wire connections into the J-Box. Secure mounting plate to junction box (hardware not included).
11. Secure the canopy to the steel mounting plate with screws installed in step 7.
12. Place pipe nipple through the mounting hole of the housing until the gasket is touching the housing frame. Thread a second nut onto the pipe nipple on the inside of the housing to lock the canopy into place. Once canopy is locked into position there will not be any side-to-side movement of the canopy.
13. Remove proper chevron(s) as required. When removing chevrons it may be helpful to remove the color diffuser panel to allow easier access to the chevrons. If removing color diffuser panel it is important to remember to reinstall the diffuser panel once chevron(s) have been removed.
14. Connect battery to lamp board (battery back up models only).
15. Secure face plate(s) to the housing.
16. Secure lens to face plate and securely torque screws.
17. Apply continuous AC power and press “TEST” button to check operation.

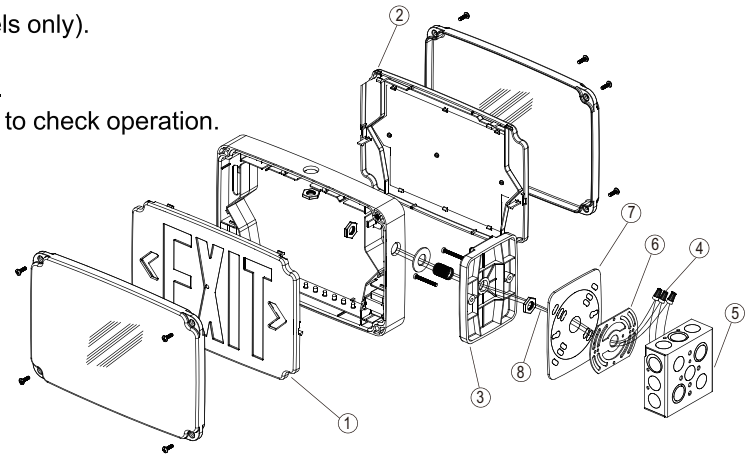

CONDUIT ENTRY

1. Drill a ¾” hole through the desired conduit entry knock out located on the top or side of the frame of the sign.
2. Route the AC input conduit into housing.
3. All conduit connections must use UL LISTED and SUITABLE FOR WET LOCATION parts.
4. To finish installation of EXIT sign, reference Wall, eiling or End Mount instructions.

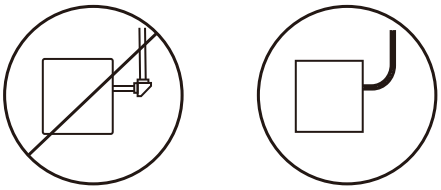

FLEXIBLE CONDUIT ONLY!

OPERATION (BATTERY BACKUP)

1. Apply AC power to the unit. The LED indicator will be RED.
2. After the battery has been left to charge for 24 hours, test the unit by pushing the switch. The LED indicator turns OFF and the LED board stays ON.
3. When the switch is released, the LED indicator turns back to RED and the LED board stays ON.

MAINTENANCE

Caution: Always turn off AC power to the equipment before servicing. Servicing should be performed only by a qualified service technician. Use only MANUFACTURER supplied replacement parts.

BATTERY: The battery supplied with the EM model requires no maintenance. However, it should be tested periodically and replaced when it no longer operates the connected sign for the duration of a 30-second or 90-minute test.

NFPA 101 (Life Safety Code) requires that all emergency lighting equipment be functionally tested every 30 days for a minimum of 30 seconds and tested annually for a full 90-minute duration. Written records of the testing are to be kept for examination by the authority having jurisdiction.

Battery Backup Wiring Diagram:

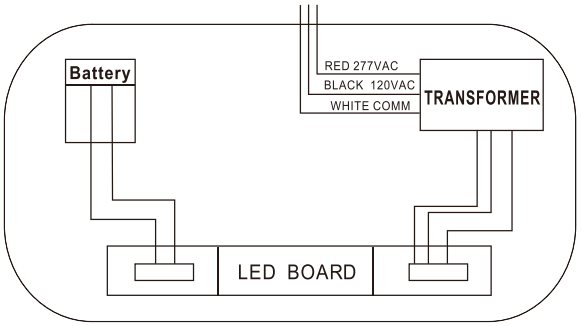

AC Only Wiring Diagram:

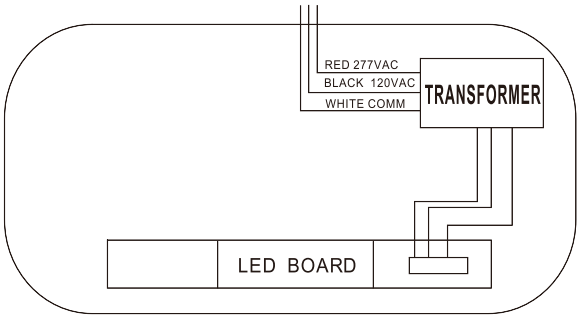

Dual Circuit Unit:

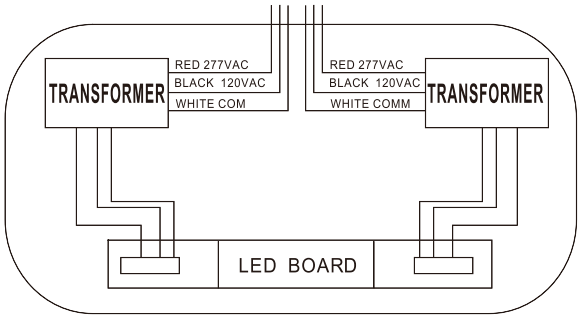

ACUITY BRANDS LIGHTING, INC.
ONE LITHONIA WAY, CONYERS, GA 30012
www.AcuityBrands.com
ASSEMBLED IN CHINA • ASSEMBLÉ EN CHINA
ENSAMBLADO EN CHINA