diode led®
a division of elemental LED

CHROMAPATH® BUILDER CHANNELS

CUSTOMIZABLE

SPECIFICATION SHEET

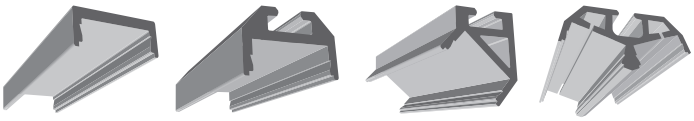

SLIM SQUARE 45° DUO

OVERVIEW

CHROMAPATH® Builder Channels provide a rigid, dust proof housing for LED tape light. Builder Channels can be ordered custom cut and fully loaded with tape light, saving time and money on installation costs. These sturdy, lightweight aluminum channels can also be purchaed in 48 inch and 96 inch sections for installation of tape light in the field. installations.

FEATURES & BENEFITS

- Industrial extrusions for custom lighting
- In-house and field cuttable channels to work with individual specifications
- Channels act as a heat sink, cooling and prolonging the LED tape light lifespan
- Multiple finishes and hardware available
- Provides additional defense from dust and debris, protecting the LED investment
- 5-Year Warranty

FINISHES

Aluminum

Satin Black

Glossy White

CUSTOM CUT AND/OR FULLY LOADED

CHROMAPATH Builder Channels Channels can be pre-cut to length and fully loaded with LED Tape Light at Elemental LED's Operations Center. Call Diode LED Customer Service to place a custom order at 877.817.6028.

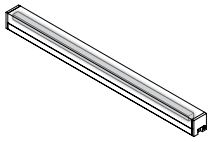

PREMIUM DIFFUSED OPTIONS

Channels listed below eliminate LED hotspots by creating totally diffused linear light when paired with compatible tape light and PREMIUM DIFFUSED cover. See pg. 5 for compatible tape lights.

ULTRA SLIM SQUARE 45°

Item #	
Project	

SPECIFICATIONS

Compliance & Regulatory Approvals

- Meets the following certifications when installed with compatible UL Listed tape light:

  UL Listed 2108. UL 1598 / CSA 250.0-08, UL 8750. UL 879 / CAN/ CSA-C22.2 no. 207-M89. E469769 (UL Listed), E469770 (SAME Manual). 12V models are suitable for installation in a clothes closet.

- Material: Aluminum
- Aluminum Finish: Clear anodized aluminum
- White Finish: White gloss powdercoat
- Black Finish: Black satin powdercoat
- Mounting Clip Material: Steel
- End Cap Material: PVC (Sold Separately)
- Cover Material: Polycarbonate (Sold Separately)
- Field Cuttable: Yes
- Wet Location[1]: No. See footnote below.
- Mounting: See Additional Accessories
- Dimensions: See Mechanical Diagrams
- Dimensions with Mounting Clips *(Square, 45° and Duo)*: +1/8 in.
- Warranty: 5 years

Environmental Requirements

- Suitable for indoor damp location use (See Note 1 for more info).

CHROMAPATH / TAPE LIGHT COMPATIBILITY

CHROMAPATH BUILDER Channels, Lenses, and tape light compatibility charts are available on page 5.

VALENT® X FULLY LOADED FIXTURES

See the VALENT X Specification Sheet and Product page for ordering information.

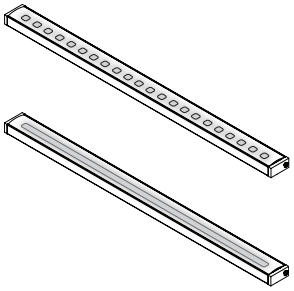

A typical LED fixture creates LED hot spots.

Valent X creates total diffused linear light in the same popular CHROMAPATH channel profiles.

CHROMAPATH® BUILDER CHANNELS

Item #	Finish	Form Factor	Included Accessories	
DI-CPCHA-SL48** DI-CPCHA-SL48W** DI-CPCHA-SL48B**	AL WH BL	**SLIM 48 in.**	Mounting Clips sold separately.	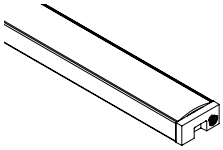
DI-CPCHA-SL72** DI-CPCHA-SL72W** DI-CPCHA-SL72B**	AL WH BL	**SLIM 72 in.**		
DI-CPCHA-SL96** DI-CPCHA-SL96W** DI-CPCHA-SL96B**	AL WH BL	**SLIM 96 in.**		
DI-CPCHA-SQ48** DI-CPCHA-SQ48W** DI-CPCHA-SQ48B**	AL WH BL	**SQUARE 48 in.**	4 Mounting Clips with screws and 2 End-to-End Interconnects. 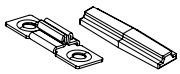	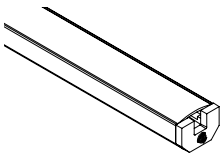
DI-CPCHA-SQ96** DI-CPCHA-SQ96W** DI-CPCHA-SQ96B**	AL WH BL	**SQUARE 96 in.**	8 Mounting Clips with screws and 4 End-to-End Interconnects. 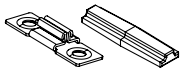	
DI-CPCHA-4548** DI-CPCHA-4548W** DI-CPCHA-4548B**	AL WH BL	**45° 48 in.**	4 Mounting Clips with screws and 2 End-to-End Interconnects. 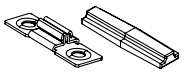	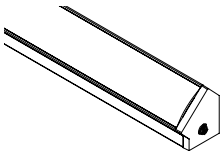
DI-CPCHA-4596** DI-CPCHA-4596W** DI-CPCHA-4596B**	AL WH BL	**45° 96 in.**	8 Mounting Clips with screws and 4 End-to-End Interconnects. 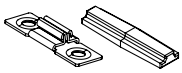	
DI-CPCHA-DU48** DI-CPCHA-DU48W** DI-CPCHA-DU48B**	AL WH BL	**DUO**	4 Mounting Clips 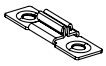	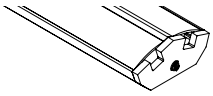

*** - SKUs listed above are for Single Channels. Add a* **-10** *for a 10 pack bundle (10 pack will include 10x the amount included accessories)*

1. CHROMAPATH channels, covers, end caps, and mounting clips are suitable for outdoor use with some careful considerations. Dry location strip light must not be used with channels for outdoor installations. Channels should never be mounted in areas receiving direct sunlight, direct water contact or puddling (rainfall, sprinkler spray, etc.). 3M® adhesive is not suitable for mounting SLIM Channel to mounting surface. SLIM channels may be mounted by drilling mounting holes or using SLIM Mounting Clips. DUO, SQUARE, and 45 channels may be mounted using the mounting clips with appropriate screws for the mounting surface material. Wet location strip light may be mounted to channels using an epoxy or silicon adhesive or 3M® adhesive. Do not leave gaps in any of the end cap or cover mating edges to the channel that will allow excess dust, debris, or water/moisture to enter the channel enclosure.

CHROMAPATH® BUILDER COVERS / END CAPS

Standard Covers & End-Caps

Item #	Finish	Form Factor	Bundles	Product Description	
DI-CPCHC-FR48**	Frosted	**Frosted Cover (48 in.)**	Single or 10 Pack	Protects LED tape light and slightly softens light. Note: there is an average warm shift in Kelvin of 35K and an average 28% decrease in delivered lumens.	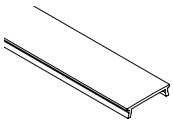
DI-CPCHC-FR72**	Frosted	**Frosted Cover (72 in.)**			
DI-CPCHC-FR96**	Frosted	**Frosted Cover (96 in.)**			
DI-CPCHC-CL48**	Clear	**Clear Cover (48 in.)**		Protects LED tape light with no visible color shift or change in delivered lumens.	
DI-CPCHC-CL72**	Clear	**Clear Cover (72 in.)**			
DI-CPCHC-CL96**	Clear	**Clear Cover (96 in.)**			
DI-CPEC-SL DI-CPEC-SLW DI-CPEC-SLB	GY WH BL	**SLIM End Caps**	Set of 5 (5 open, 5 closed)	A set of end caps includes closed and notched open cap that can accommodate wire up to 18/2 AWG. Available in three color options: Gray, White, and Black.	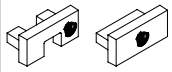
DI-CPEC-SQ DI-CPEC-SQW DI-CPEC-SQB	GY WH BL	**SQUARE End Caps**	Set of 5 (5 open, 5 closed)		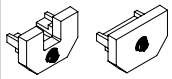
DI-CPEC-45 DI-CPEC-45W DI-CPEC-45B	GY WH BL	**45° End Caps**	Set of 5 (5 open right, 5 closed right, 5 open left, 5 closed left)		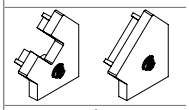
DI-CPEC-DU DI-CPEC-DUW DI-CPEC-DUB	GY WH BL	**DUO End Caps**	Set of 5 (5 open, 5 closed)		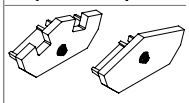

Premium Diffusion Covers & End-Caps

Item #	Finish	Form Factor	Bundles	Product Description	
DI-CPCHC-PD48**	Frosted	**Premium Diffusion Cover (48 in.)**	Single or 10 Pack	The ultimate in total diffusion for uninterrupted continuous LED light output. Adds 0.74in. height to channel. Note: there is an average warm shift in Kelvin of 75K and an average 24% decrease in delivered lumens.	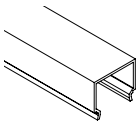
DI-CPCHC-PD72**	Frosted	**Premium Diffusion Cover (72 in.)**			
DI-CPCHC-PD96**	Frosted	**Premium Diffusion Cover (96 in.)**			
DI-CPEC-SLPD DI-CPEC-SLPDW DI-CPEC-SLPDB	GY WH BL	**SLIM Premium Diffusion End-Caps**	Set of 5 (5 open, 5 closed)	A set of end caps includes closed and one notched open cap that can accommodate wire up to 18/2 AWG.	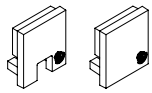
DI-CPEC-SQPD DI-CPEC-SQPDW DI-CPEC-SQPDB	GY WH BL	**SQUARE Premium Diffusion End-Caps**	Set of 5 (5 open, 5 closed)		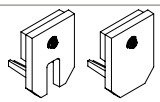
DI-CPEC-45PD DI-CPEC-45PDW DI-CPEC-45PDB	GY WH BL	**45° Premium Diffusion End-Caps**	Set of 5 (5 open right, 5 closed right, 5 open left, 5 closed left)		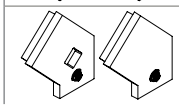

*** - SKUs listed above are for Single covers. Add a* **-10** *for a 10 pack bundle.*

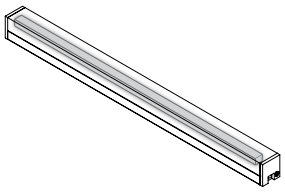

PREMIUM DIFFUSION COMPATIBILITY NOTE

The CHROMAPATH PREMIUM DIFFUSION cover creates total diffused linear light. Simply swap out your standard CHROMAPATH cover for a PREMIUM DIFFUSION cover to eliminate LED hot spots. Compatible tape lights are listed on page 5.

CHROMAPATH® BUILDER ACCESSORIES CONT.

Mounting Accessories - SQUARE / 45° / DUO

Item #	Finish	Form Factor	Bundles	Product Description	
DI-CPMC2-SCR4	Steel	**Mounting Clips**	Pack of 2 clips / 4 screws	Secure CHROMAPATH to flat surface with this pressure-fit clip. Adds 0.12in. height to channel.	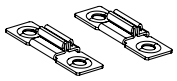
DI-1630-20			Pack of 20 clips / 40 screws		
DI-1912	Steel	**Vertical Mounting Brackets**	Pack of 2	Used to install CHROMAPATH in a vertical orientation and includes an Allen key and allen screws for securing to a vertical surface.	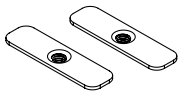
DI-CPCH-HNG	Steel	**Hanging Hardware Kit**	Pack of 2 hanging mounts / 2 Wire restrainers / 4 screws	Transform your CHROMAPATH Channel into a pendent fixture with CHROMAPATH Hanging Hardware Kit. (One kit recommended for every 48" of channel)	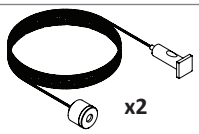
DI-CPCH-RC-BA DI-CPCH-RC-WH DI-CPCH-RC-BL	AL WH BL	**Rotating Mounting Clips**	Pack of 2 clips / 4 screws	Secure CHROMAPATH to flat surface and adjust to desired angle with this pressure-fit clip. Adds 0.74in. height to channel.	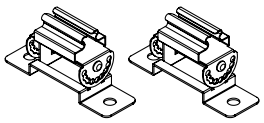

Mounting Accessories - SLIM

Item #	Finish	Form Factor	Bundles	Product Description	
DI-1633	AL WH BL N/A	**SLIM Mounting Tape**	4 ft. x 0.75 in.	3M® high-bond double-sided adhesive tape designed to install the CHROMAPATH SLIM on a flat, indoor surface.	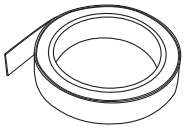
DI-1634			12 ft. x 0.75 in.		
DI-CPCH-UC-BA DI-CPCH-UC-WH DI-CPCH-UC-BL	AL WH BL	**SLIM Mounting U-Clips**	Pack of 2 clips / 4 screws	Secure SLIM Channel to flat surface with this pressure-fit clip. Also compatible when installed with PREMIUM DIFFUSION cover. Adds 0.12in. height to channel.	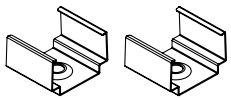
DI-CPCH-MUC-BA DI-CPCH-MUC-WH DI-CPCH-MUC-BL	AL WH BL	**SLIM Magnetic Mounting U-Clips**	Pack of 2 clips	Secure SLIM Channel to flat metal surface with this magnetic clip. Also compatible when installed with PREMIUM DIFFUSION cover. Adds 0.23in. height to channel.	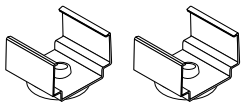

MOUNTING

1 DRAW GUIDE LINE & FASTEN STANDARD MOUNTING CLIPS.

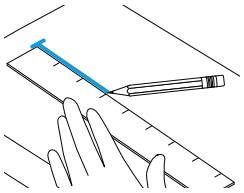

a. Draw guiding line with a ruler and pencil.

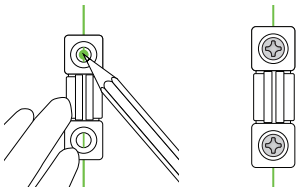

b. Mark holes. Use min one clip for every foot of channel. Fasten with applicable screws w/ screwdriver or drill.

2 MOUNT CHROMAPATH CHANNEL

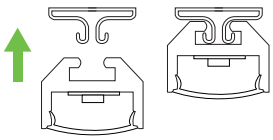

a. Firmly press channel into mounting clip.

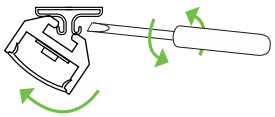

b. Use flathead screwdriver to remove. Wrap tip with masking tape to prevent scratching channel surface.

Note: Mount SLIM Channels with Mounting Tape or SLIM Mounting U-Clips.

MOUNTING VERTICALLY?

See the CHROMAPATH Vertical Mounting Bracket Installation Guide at www.DiodeLED.com.

CHROMAPATH® & TAPE LIGHT COMPATIBILITY

The following tape lights are compatible with CHROMAPATH BUILDER Channels. Tape Lights not listed on this chart are not compatible. Take note that some CLICKTIGHT® Tape Light Connectors will not fit in CHROMAPATH BUILDER Channels.

Tape Light	Tape Light & CHROMAPATH® Compatibility	CLICKTIGHT® Connector [2] & CHROMAPATH® Compatibility
AVENUE 24™	x	x
BLAZE™	x	x
BLAZE™ Wet Location [1]	x	
DAZZLE® RGB	x	x
DAZZLE® RGBW	x	
DAZZLE® RGBW 4D	x	
DOUBLE BLAZE™	x	
FLUID VIEW®	x	x
FLUID VIEW® Wet Location [1]	x	
K-RANGE®	x	x
ULTRA BLAZE™	x	x
VALENT®**	x	x
VALENT® HD	x	x
VALENT® X	x	x

CHROMAPATH® COVER COMPATIBILITY

The following products are compatible with CHROMAPATH Covers. Components not listed on this chart are not compatible.

Component	Description	Frosted & Clear Cover	Premium Diffusion Cover
Aluminum Channel	SLIM	x	x
	SQUARE	x	x
	45 DEG	x	x
	DUO [3]	x	
Tape Light	AVENUE 24™	x	x
	BLAZE™	x	x
	DAZZLE® RGB	x	x
	DAZZLE® RGBW [4]	x	
	DAZZLE® RGBW 4D	x	x
	DOUBLE BLAZE™	x	x
	FLUID VIEW®	x	x
	K-RANGE®	x	x
	ULTRA BLAZE™	x	x
	VALENT®**	x	
	VALENT® HD	x	x
	VALENT® X	x	x

1. CHROMAPATH channels, covers, end caps, and mounting clips are suitable for outdoor use with some careful considerations. Wet location strip light must be used with channels for outdoor installations. Channels should never be mounted in areas receiving direct sunlight, direct water contact or puddling (rainfall, sprinkler spray, etc.). 3M® adhesive is not suitable for mounting SLIM Channel to mounting surface. SLIM channels may be mounted by drilling mounting holes or using SLIM Mounting Clips. DUO, SQUARE, and 45 channels may be mounted using the mounting clips with appropriate screws for the mounting surface material. Wet location strip light may be mounted to channels using an epoxy or silicon adhesive or 3M® adhesive. Do not leave gaps in any of the end cap or cover mating edges to the channel that will allow excess dust, debris, or water/moisture to enter the channel enclosure.
2. CLICKTIGHT and CLICKTIGHT PRO versions are both compatible with tape lights and channels marked with an 'x' (CLICKTIGHT PRO is not compatible with DAZZLE RGB and K-RANGE Tape Lights).
3. Premium Diffusion Cover is not intended for use with DUO Channel.
4. LED Chip spacing is too wide and will not emit a diffused look.

MECHANICAL DIAGRAMS

SLIM Channel

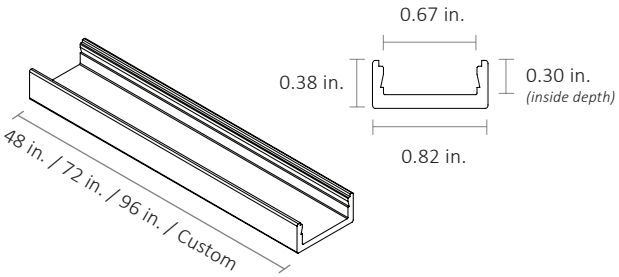

Clear / Frosted Cover

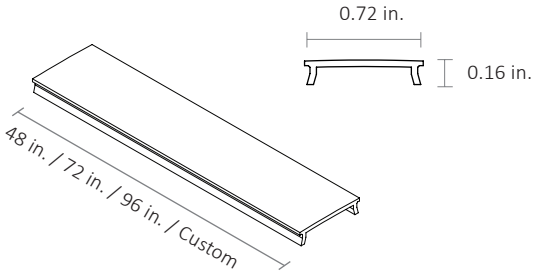

SQUARE Channel

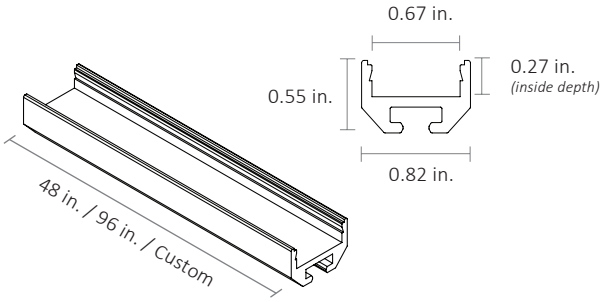

PREMIUM DIFFUSION Cover

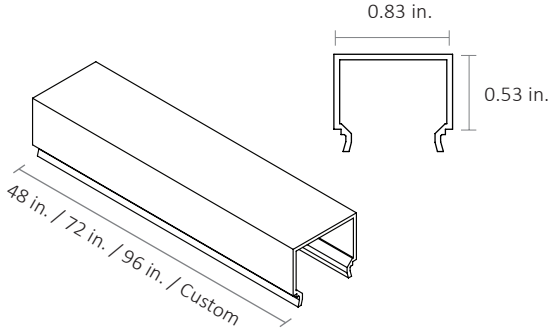

45° Channel

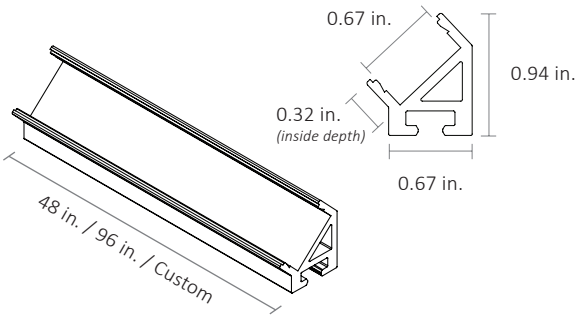

DUO Channel

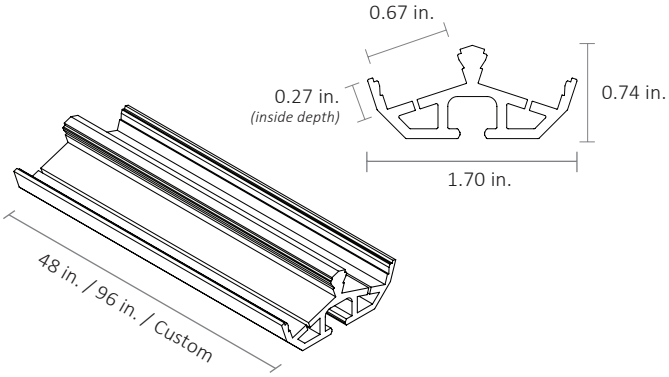

Mounting Clip

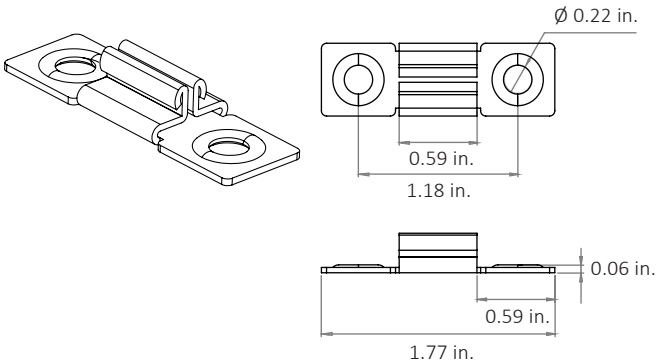

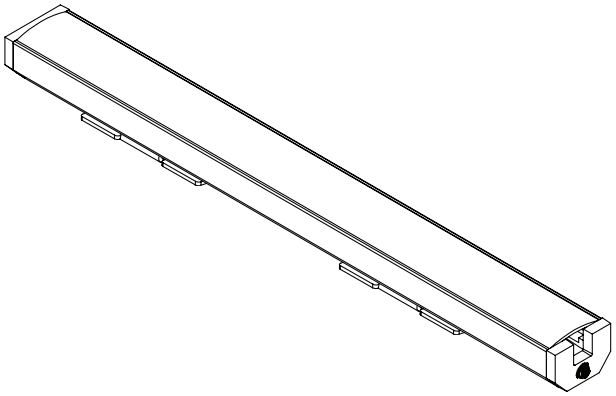

MECHANICAL DIAGRAMS

Rotating Mounting Clip

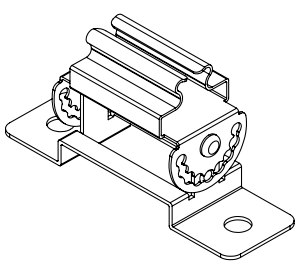

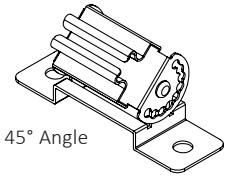

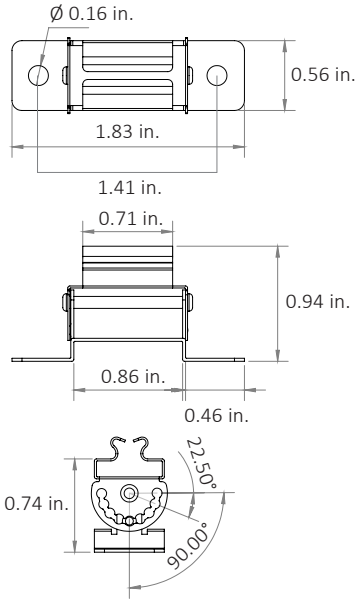

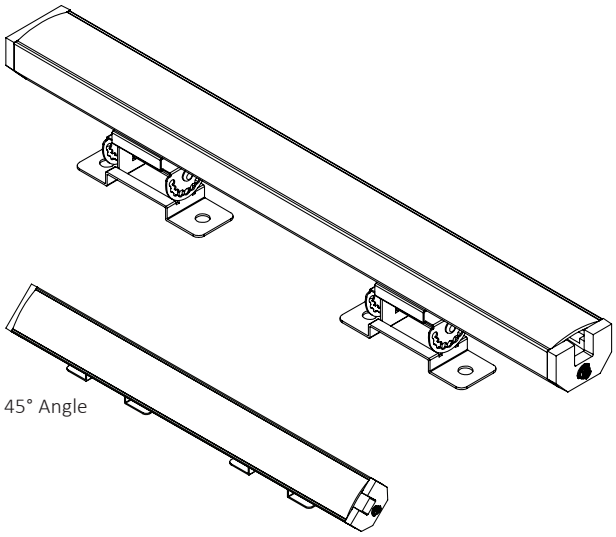

SLIM Mounting U-Clip

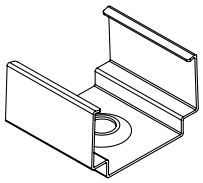

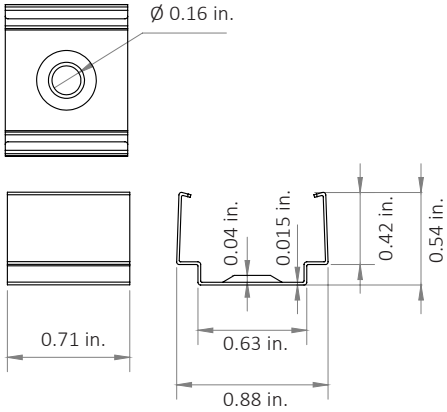

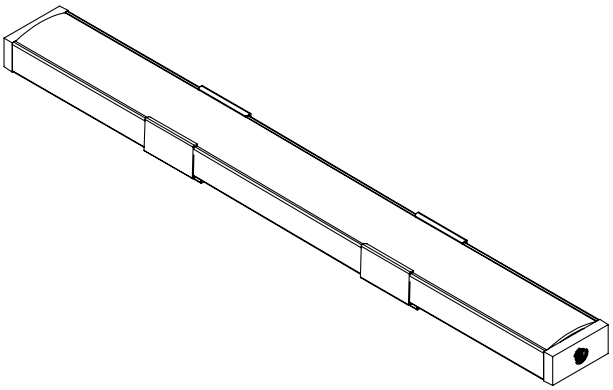

SLIM Magnetic Mounting U-Clip

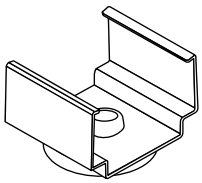

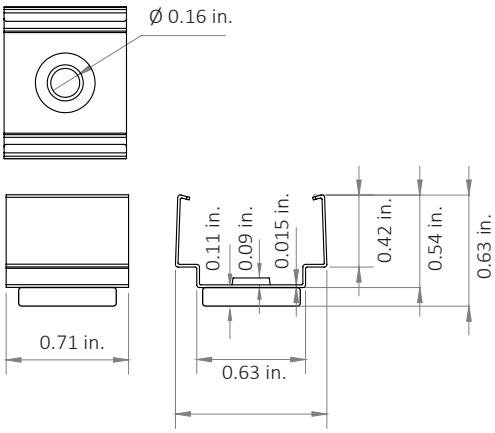

MECHANICAL DIAGRAMS

Hanging Hardware Kit (One kit recommended for every 48" of Channel)

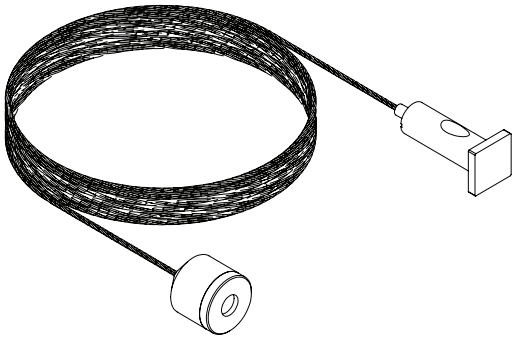

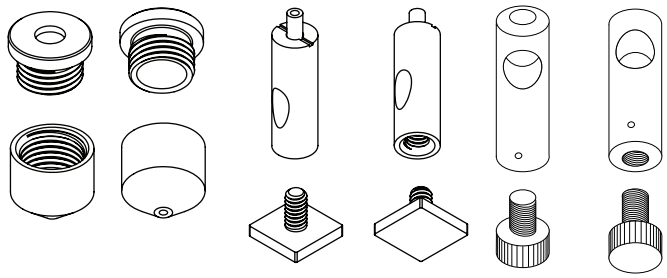

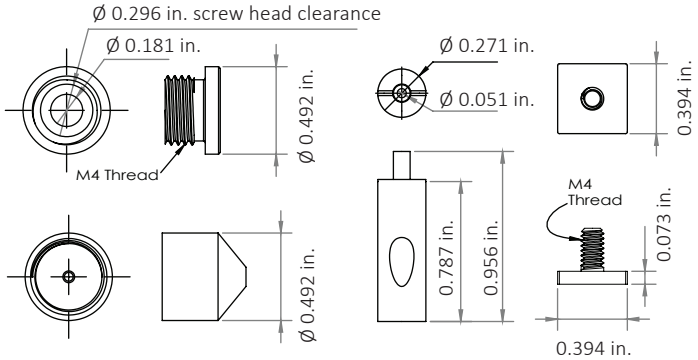

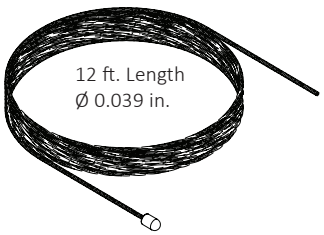

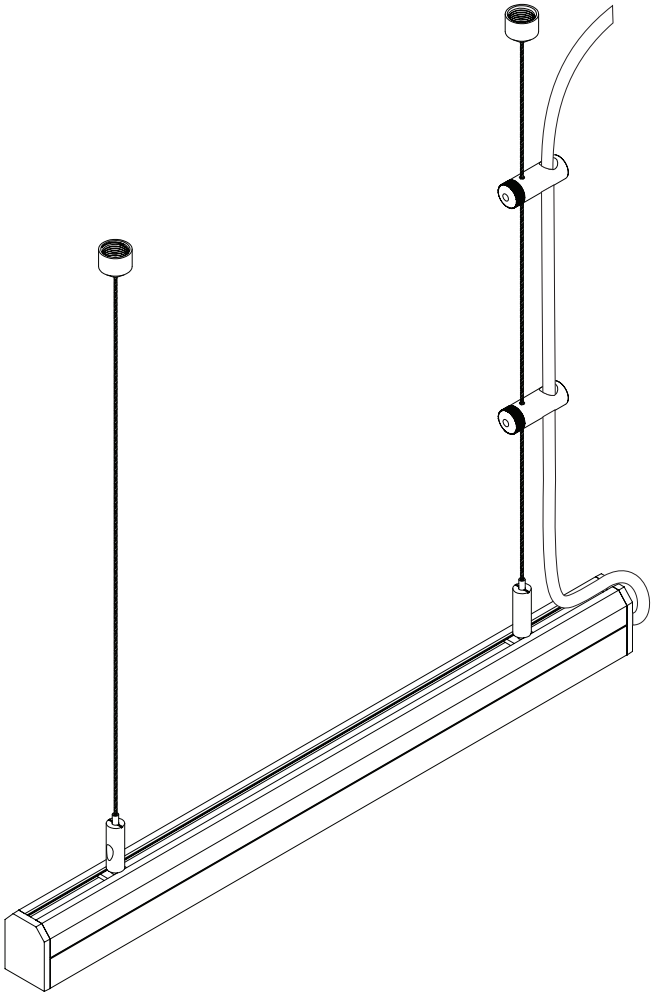

ADDITIONAL RESOURCES

CHROMAPATH PREMIUM DIFFUSION COVER SPEC SHEET
CHROMAPATH CHANNEL BUNDLES SPEC SHEET
CHROMAPATH ALUMINUM CHANNEL INSTALL GUIDE
CHROMAPATH VERTICAL MOUNTING BRACKET INSTALL GUIDE
LOW VOLTAGE TAPE LIGHT SPECIFICATION SHEETS
LOW VOLTAGE LED TAPE LIGHT INSTALL GUIDE
CUSTOM CUT CHROMAPATH ALUMINUM CHANNELS ORDER FORM
VALENT® X SPEC SHEET

SAFETY / WARNINGS / DISCLOSURES

1. Install in accordance with national and local electrical code regulations.
2. Do not modify or disassemble this product beyond instructions or the warranty will be void.
3. Our CHROMAPATH channels, covers, end caps, and mounting clips are suitable for outdoor use with some careful considerations. Waterproof strip light must be used with channels for outdoor installations. Channels should never be mounted in areas receiving direct sunlight, direct water contact or puddling (rainfall, sprinkler spray, etc.). 3M adhesive is not suitable for outdoor mounting of strip-to-channel or SLIM channel-to-mounting surfaces. SLIM channels may be mounted by drilling mounting holes and using appropriate screws for the mounting surface material. DUO, SQUARE, and 45 channels may be mounted using the mounting clips with appropriate screws for the mounting surface material. Waterproof striplight may be mounted to channels using an epoxy or silicon adhesive. Do not leave gaps in any of the end cap or cover mating edges to the channel that will allow excess dust, debris, or water/moisture to enter the channel enclosure.
4. Mixing and matching finished hardware and accessories can result in loose or tight fit assemblies. We strongly recommend matching hardware and endcaps to the channel finish selected.
5. Actual color may vary from what is pictured on this sheet and other print materials due to the limitations of photographic processes.
6. We reserve the right to modify and improve the design of our fixtures without prior notice. We cannot guarantee to match existing installed fixtures for subsequent orders or replacements in regards to product appearance, CCT, or lumen output.

WARRANTY

Limited Warranty

This product has a five (5) year limited warranty from the date of shipment. This warranty does not include the additional accessories referenced in this specification sheet. Complete warranty details for fixtures and additional accessories are available at www.diodeled.com/limited-warranty/ within the Policies section. For warranty related questions please contact product support.

Consumer's Acknowledgment

Elemental LED, Inc. stands behind its products when they are used properly and according to our specifications. By purchasing our products, the purchaser agrees and acknowledges that lighting design, configuration and installation is a complex process, wherein seemingly minor factors or changes in layout and infield adjustments can have a significant impact on an entire system. Choosing the correct components is essential. Elemental LED is able to work with the original purchaser to make an appropriate product selection to the extent of the limited information that the customer can provide, but it is virtually impossible for Elemental LED to design a system that foresees every unknown factor. For this reason, this Warranty does not cover problems caused by improper design, configuration or installation issues. Any statement from a Elemental LED employee or agent regarding a customer's bill of goods and/or purchase order is NOT an acknowledgment that the products purchased are designed and configured correctly. The purchase agrees and acknowledges that it is the customer's responsibility to adhere strictly to all information contained in the Product Specification Sheets.

There is often more than one way to design, configure and layout an LED lighting application properly to achieve the same lighting effect. Elemental LED strongly recommends that licensed professionals be used in the design and installation of lighting systems that include Elemental LED products. The specifications include important information that a designer and installer should carefully review and strictly follow. Qualified designers and certified and/or licensed installers, with access to the final installation environment, customer goals, and Elemental LED product specifications can make the requisite decisions appropriate for a successful finished lighting application.

diode led®
a division of elemental LED

© 2020 Elemental LED, Inc. All rights reserved.
Specifications are subject to change without notice.
Toll Free: 877.817.6028 | www.elementalled.com | solutions@elementalled.com