GLT

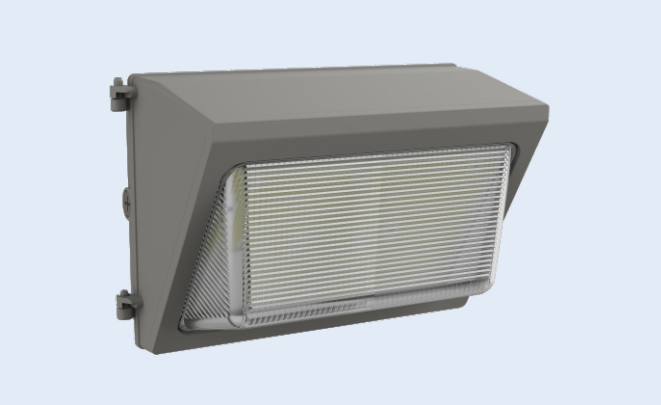

LED WALL PACK LIGHT

Replacing metal halide fixtures with WK04 series LED wall pack increases energy efficiency and lowers maint enance costs. Photocell is built into housing to automate daytime OFF nighttime ON, But can be easily bypassed to meet different operational needs, Rugged die-cast aluminum housing is powder coated, while durable glass lens is UV-stabilized to withstand conditions of outdoor industrial or commercial locations.

Intertek

Energy Saving 70%

5 Years warranty

Ra>80 PF>0.9

Product Features

- **Using an isolated,0-10V dimmable.**
- **Protection level: Wet Location**

The wall pack is sealed by silicone ring that can avoid dust completely and be waterproof, also the internal level ensures that the installation is horizontal.

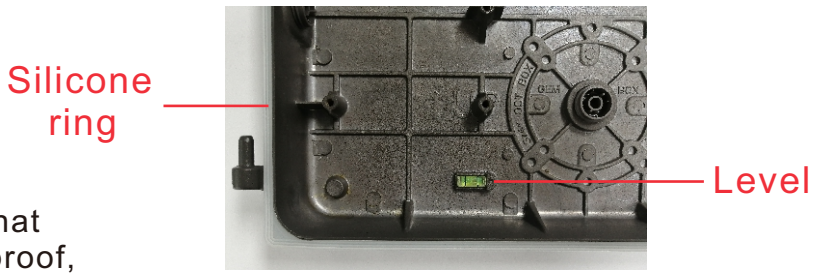

Product Dimension

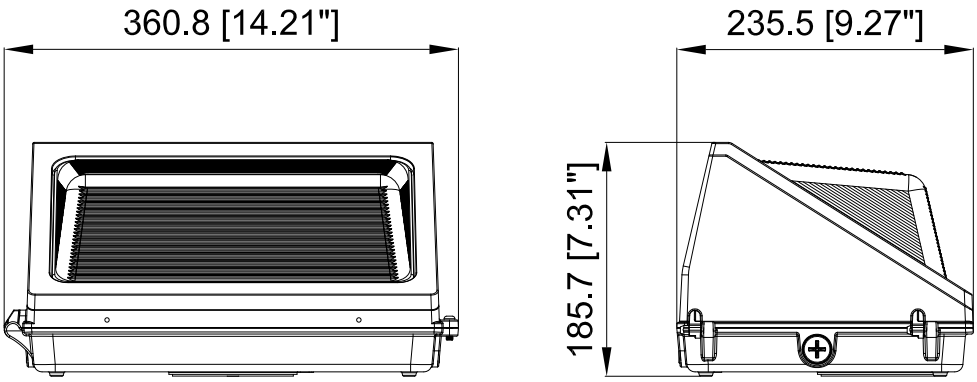

Specification

Name	Part No.	Power	Input Voltage	Input Current	PF	Light Efficacy	CCT	Ra
Wall Pack Light	DM03-100W50-NO-C	60W/80W/100W	AC120-277V	0.917	0.9	130lm/W (All light effect)	3500K/4000K/5000K	80
	DM03-120W50-NO-C	80W/100W/120W		1.1				

Installation Instruction

1.Use a screw driver to unscrew the lamp screws and remove the uppper half of the fixture.

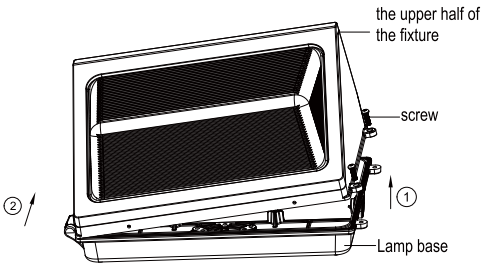

2.Unscrew the cover of the entry hole on the lamp base and remove the cover.

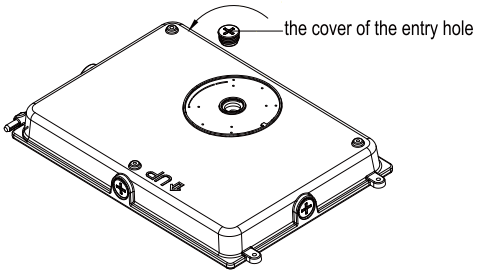

3. According to the embedded terminal box, punch the correspongding mounting hole on the light's mount.

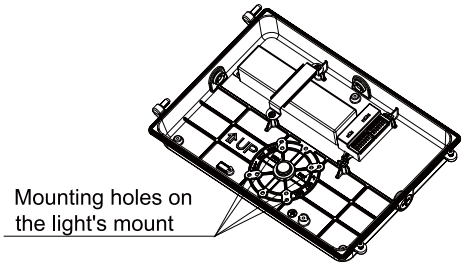

4. Put the input line in the embedded box passes through the waterproof pad and then passed through the lamp base.

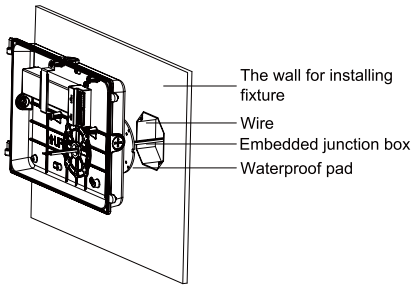

5.Use screw to lock the lamp base on the embedded junction box.

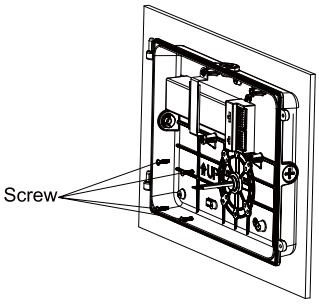

6.Connect the input wire and the dimming wire of the light, then put the connect ed wires into the embedded terminal box.

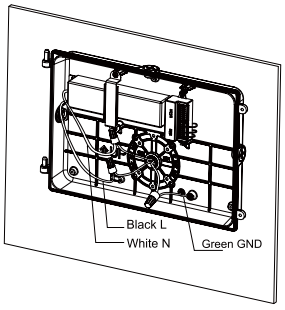

Installation Instruction

7.Connect the out put wires of driver with the wires of PCB board.

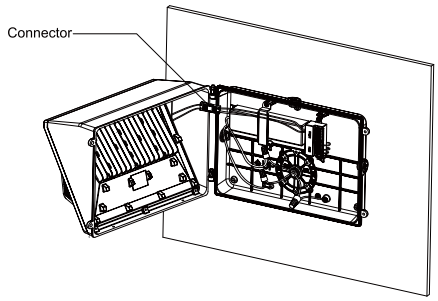

8.Use screws to lock the fixture. Installation completed.

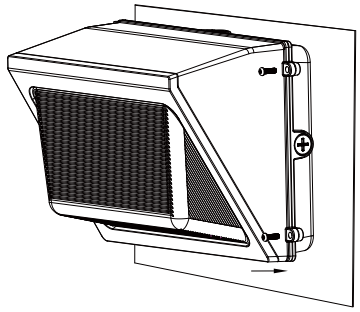

Packing/Weight

Fixture	Outber box (L*W*H)	Qty/Ctn (pcs)	N.W/pcs (lbs/Kg)	G.W/pcs (lbs/Kg)	Remarks
100W	420*300*248mm 16.54"*11.81"*9.76"	1	9.79/4.44	11.13/5.05	0.15M cable
120W		1	9.96/4.52	11.27/5.11	

Applications

Note

1. The installation and maintenance must be completed by electricians or professionals.
2. Please cut off the power before installation and maintenance.
3. The thermally insulating material is not allowed to cover the fixture.
4. Please keep away from the corrosive substance.
5. Working temperature: -4ºF~113ºF, storage temperature: -22ºF~140°F.