PARK34-45W/120/PIR/BL

RAB

Color: White

Weight: 2.1 lbs

Project:	Type:
Prepared By:	Date:

Driver Info

Type	Constant Current
120V	0.38A
208V	N/A
240V	N/A
277V	N/A
Input Watts	45.2W

LED Info

Watts	45W
Color Temp	5000K (Cool)
Color Accuracy	76 CRI
L70 Lifespan	100,000 Hours
Lumens	5,629
Efficacy	124.5

Technical Specifications

Compliance

UL Listed:

Suitable for wet locations

IESNA LM-79 & LM-80 Testing:

RAB LED luminaires and LED components have been tested by an independent laboratory in accordance with IESNA LM-79 and LM-80.

DLC Listed:

This product is on the Design Lights Consortium (DLC) Qualified Products List and is eligible for rebates from DLC Member Utilities. Designed to meet DLC 5.1 requirements.
DLC Product Code: S-B1PUE0

LED Characteristics

LEDs:

Long-life, high-efficacy, surface-mount LEDs

Color Consistency:

7-step MacAdam Ellipse binning to achieve consistent fixture-to-fixture color

Color Uniformity:

RAB's range of Correlated Color Temperature follows the guidelines of the American National Standard for Specifications for the Chromaticity of Solid State Lighting (SSL) Products, ANSI C78.377-2017.

Electrical

Driver:

Driver on board, Class B, 50/60 Hz, 120V: 0.38A

Dimming Driver:

Integrated/embedded revise Phase-Cut stepped luminaire-level dimming control. Ten discrete dimming steps plus off and full on are accomplished by modification of the voltage, current, and waveform to produce varying light output. Controller is remote located from fixture or junction box or can be located by the electrical panel.

THD:

4.94% at 120V

Power Factor:

99.4% at 120V

Surge Protection:

3kA

Performance

Lifespan:

100,000-Hour LED lifespan based on IES LM-80 results and TM-21 calculations

Construction

IP Rating:

Ingress protection rating of IP65 for dust and water

Cold Weather Starting:

The minimum starting temperature is -40°C (-40°F)

Copyright © 2022 RAB Lighting All Rights Reserved Note: Specifications are subject to change at any time without notice

Technical Specifications (continued)

Construction

Maximum Ambient Temperature:

Suitable for use in up to 40°C (104°F)

Mounting:

PARK34 accommodates surface mounting and its unique, removable adapter allows for both 1/2" and 3/4" NPT pendant mounting (by others).

Lens:

Polycarbonate lens

Reflector:

Aluminum with high reflectance white finish, optimized for uniform distribution.

Gaskets:

Nitrile rubber

Finish:

Formulated for high durability and long-lasting color

Green Technology:

Mercury and UV free. RoHS-compliant components.

Sensor Specifications

Maximum Mounting Height:

13 ft.

Voltage:

12V DC (+3V-0V)

Dimming:

0-10V dimming ouput, max 20mA sinking current

Operating Temperature:

-20°C - 50°C (-4°F - 122°F)

Storage Temperature:

-25°C - 70°C (-13°F - 158°F)

Operating Humidity:

5% - 93% without condensation

IP Rating:

IP20

Warm Up Time:

45s +/-5s

Standby (w):

<0.3W

Module Interaction:

Wire AWG 22 (Grey Dim -, Purple Dim +, Yellow 12V DC)

On-Time Adjustment:

10s, 5min, 10min, 30min with +/-5% tolerance (Factory Setting: 30min +/-5%)

Bi-Level:

0, 10%, 30%, 50% with +/-5% tolerance (Factory Setting: 10%)

Debounce Time:

Day to Night: 5s
Night to Day: 30s

Open Circuit Protection:

No

Short Circuit Protection :

Yes

Other

5 Yr Limited Warranty:

The RAB 5-year, limited warranty covers light output, driver performance and paint finish. RAB's warranty is subject to all terms and conditions found at rablighting.com/warranty.

Buy American Act Compliance:

RAB values USA manufacturing! Upon request, RAB may be able to manufacture this product to be compliant with the Buy American Act (BAA). Please contact customer service to request a quote for the product to be made BAA compliant.

Equivalency:

Equivalent to 175W Metal Halide

Dimensions

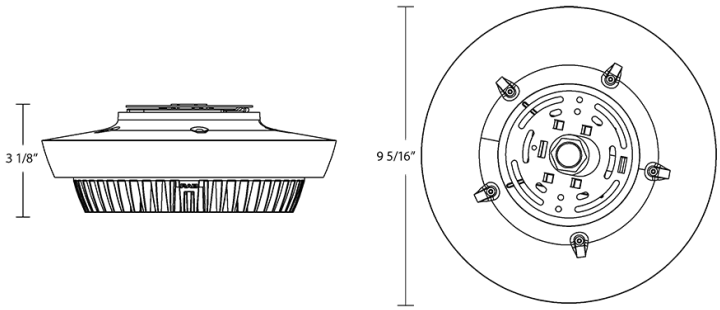

Features

- IP65 Rated
- 100,000-Hour LED lifespan
- 5-Year, Limited Warranty

Copyright © 2022 RAB Lighting All Rights Reserved Note: Specifications are subject to change at any time without notice

PARK34-45W/120/PIR/BL

RAB

Ordering Matrix

Family		Wattage	Color Temp	Finish	Voltage	Options
PARK34	–	45		W	/120	/PIR/BL
		30 = 30W **45 =** 45W **60 =** 60W	**Blank =** 5000K Cool **N =** 4000K Neutral	**W =** White	**/120 =** 120V **/277 =** 277V	**Blank =** No Option **/PIR/BL =** Passive Infrared Sensor w/ Bi-Level

Copyright © 2022 RAB Lighting All Rights Reserved Note: Specifications are subject to change at any time without notice